Magnum

Magnum Instructions

Color Plane
Glue Fuselage
Build/Hinge Wing
Build/Hinge Elevator
Install Wing
Install Elevator
Install Horizontal(Shocky) Panels
Hinge Rudder
Install Landing Gear
Install Electronics
Check for Reversed Channels

First I will bring to your attention that, as with all hobbies involving powered vehicles, risks are involved. Please be aware that moving parts often carry an amount of force that has surprised many, ending in harm to property and person. A rotating part can store enormous energy that is nothing less than dangerous. Follow all the safety rules, and instructions that come with your props, batteries, and other electronics, as well as those of your club. Be SAFE!!!

Okay now onto the building...

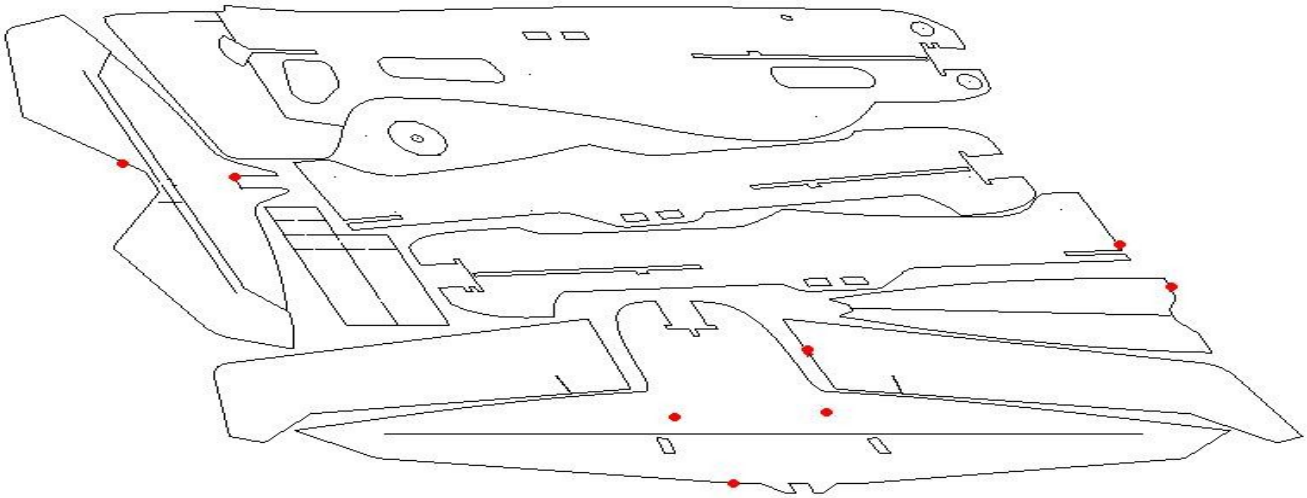

The red dots indicate where small slots have been made to help with the build. They are on the left side, most are to allow you to easily keep the finishes the same one the top and outer pieces. A few will help with alignment, and others with gear placement.
First step will be to do your coloring to the plane. We've found that this is always easier while the parts are laying flat.

Once you are ready to start we'll go to the fuselage assembly. There are many types of glue that will work, foam safe CA, Gorilla glue, epoxy, Loctite Sumo glue, etc. For gluing the fuse pieces together we recommend 30min epoxy, or thick foam safe CA. You can trace the lightening holes to the outer pieces before gluing to help avoid wasting the glue. The slow setting epoxy is much easier to work with, but does take a long time to set.

The following pics show how to line up your parts:

Lay out a side of the fuselage, and put the alignment tabs into place. Take care not to glue the tabs.

With glue and tabs in place put the center fuse in place over the tabs.

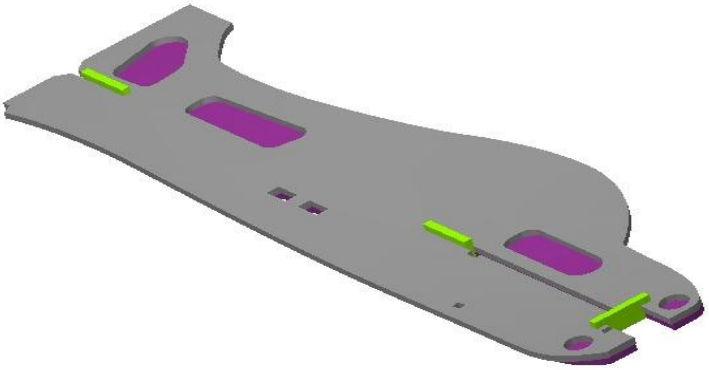

Take care to line up all the inside edges, this is crucial to the entire build!!!
If using CA accelerator, put both parts together to allow glue to be on both parts then lift the tail apart . You want to be sure the alignment block is still seated in the motor mount slot. Lightly mist with accelerator, then quickly lay the tail down over the wing's and elevator's alignment blocks. It is important that the alignment blocks stay straight, if not then the motor mount will not be straight, wings, etc.
The other side will go on the same, keeping an eye on the inside edges still.

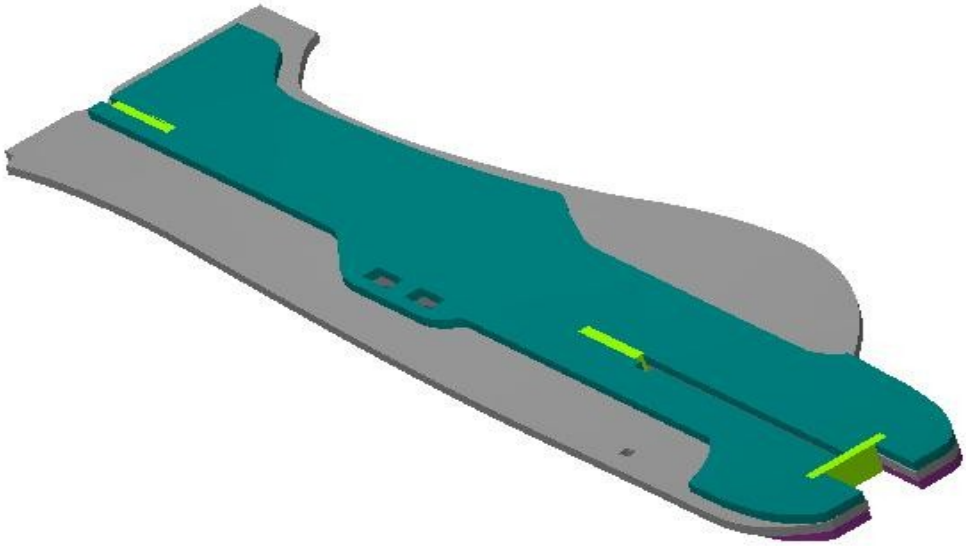

While the glue cures remove the tabs, being careful that the parts stay aligned. This is to keep the tabs from accidentally being glued in.

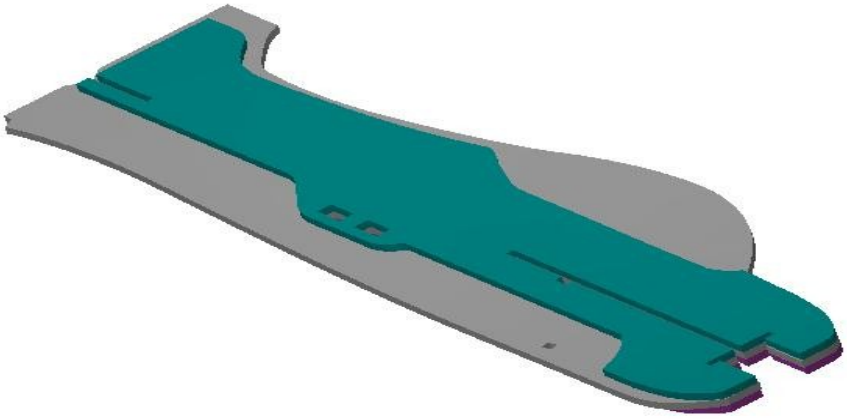

While the fuselage is drying, you can move onto the hinges (not the rudder). Take note of the cuts marking left. Nothing fancy here, just bevel and tape, if possible use a knife to cut the bevels rather than sanding them. The knife will keep the mess down and not leave the dust behind for the taped hinges. Leave the rudder off the fuselage for now, and make sure the fuselage has set before trying to bevel the hinge.

When taping, be sure that area to be taped is clean, both oil and dust free. Leave a small gap at the pivot to allow the tape to touch the other side's tape. The tape will create a better bond this way, as well as allow for a smooth, free swing.

Optional is to add a small, 0.5" or so, piece of tape that wraps around the top to bottom, at the edges of the hinge

This is also a great time to glue in the wing and elevator's carbon spars. Again nothing fancy, and you have many choices for glue.

As for the control horns, we recommend that a light amount of foam safe CA be used. The horn should fit tightly into the slots, take care not to break them while installing. It is exceptable to loosen the fit by

rubbing the back side of your knife inside the slot, widening it slightly. And take note that the elevator's spar is saddled by it's control horn. You may need to shave a little material in this horn's slot to best fit the spar. Again, take note of the cuts marking left, leaving the control horn down on the right hand side. With the ailerons and elevator hinged and ready to go it is time to finish up the major parts of the build. First slide in the wing, hopefully you have been watching the left hand marks. If the wing is upside down the slots for gear placement will be backwards after this step.

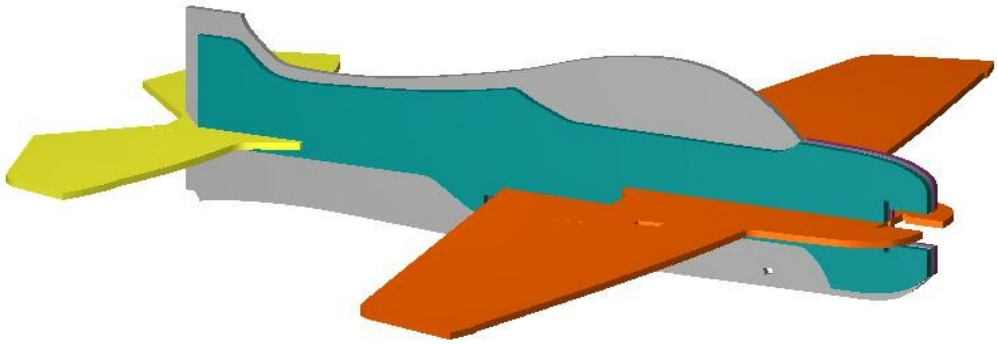

With the wing seated in place the notches for the motor mount should line up. Pull the upper section of the fuse to the side just far enough to allow the foam motor mount to drop in.

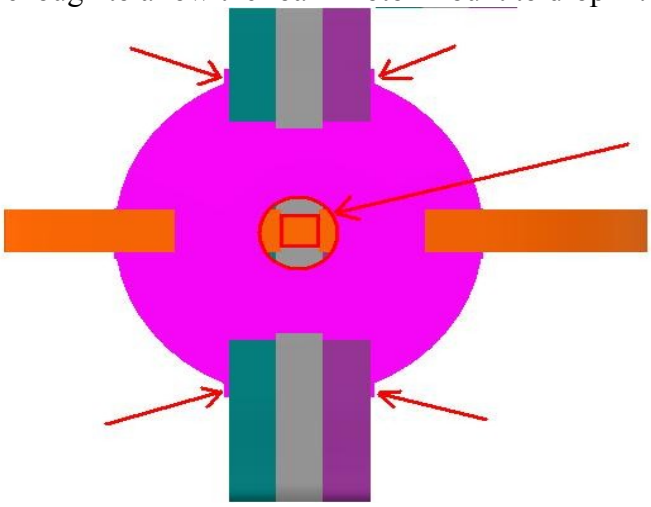

Line up the mount to the foam inside and around the mount. After you are sure that all is lined up well, glue in place. For this step hot glue is recommended, but a thick CA will also work well. At this time make sure the fuse is running straight between the back and front of the wing. Eye sight works well enough for us most times, a straight edge or flat table/counter top will also work great. With that double checked run a bead of glue down the length of the wing, both sides, top an bottom. The glue of choice here is also hot glue, with a thick foam safe CA being second. With the foam mount in place slide the ply mount onto the foam. If fit is good, remove, add glue, reinstall.

The elevator simply slides in the back. The notch on the front will line up that end, your eyes are needed for the back side. All of our kits will offer something to align to, either laser cut markers, or clearance from the elevator to the fuselage. Be sure to look at both the top and bottom sides. Check the elevators travel through it's full range. If you want more travel now is the time to cut for it. Before gluing check that the elevator and wing are parallel. With all checks done and you being

satisfied, glue in place. Again, hot glue or thick foam safe CA.

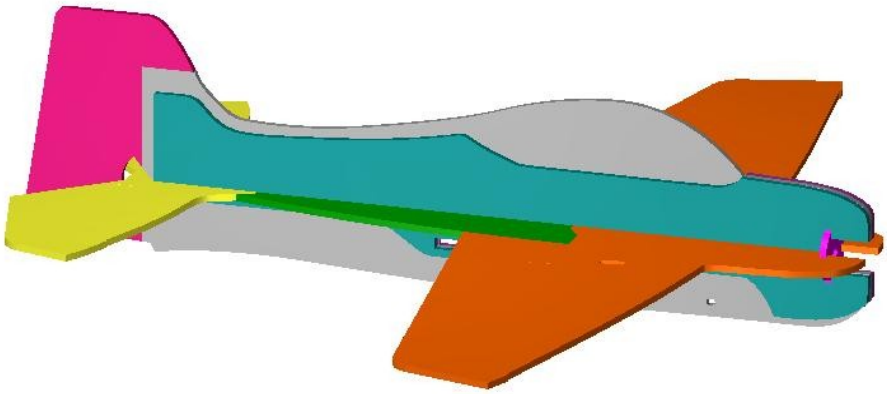

With the elevator in place, it is time to hinge the rudder.
If you are using the optional horizontal sides you can put these on now as well. To keep everything even straighter use a rigid straight edge going from the wing to the elevator. Use the straight edge to hold both the side panel as well as the fuselage straight. CA works very well for this step, depending on the amount of force used inserting the wing and elevator, some trimming may be needed. Next you can cut the 1mm carbon and glue to the fuselage, running from under the wing to under the elevator stab both sides.

With the rudder on you can now mount your electronics. Just leave the battery until after the landing gear is installed. Once the electronics are on and all has been tested we'll move onto the gear.
There are small slots in the wing that serve as placement guides for the square carbon gear, these will only be right if the cut for left side on the wing is on the left. The thing to remember with these is to do both sides the same, fore, aft, or centered on the mark. If you do the same to both sides the gear will come out straight on the bottom. As shown in the picture the strut attached to the left side of the wing should be in the aft side of the hole where the struts cross. The left leg crossing behind the right leg.

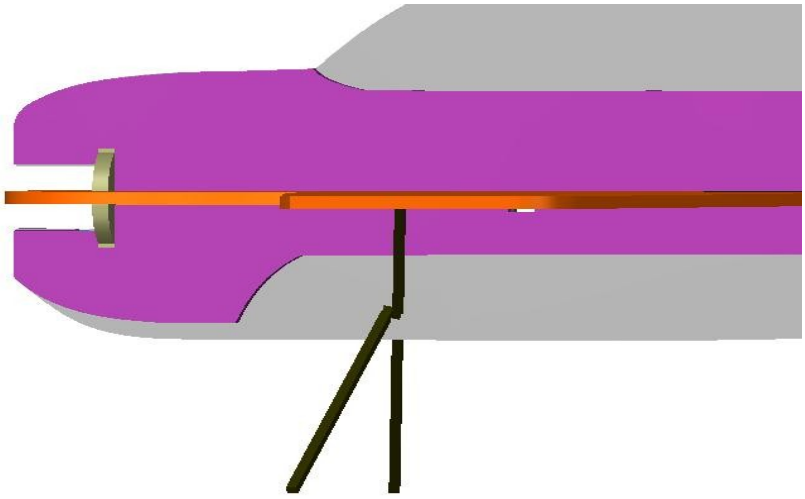

Not far to go now!!!

Install the wheel's wire by heating the heat shrink while holding the wire in place. Start away from your fingers on one edge. The heat shrink will grab and then you can remove your fingers and finish. While you are at it feel free to attach wire to one side of you control rod as well. Notice the amount of time you will have before the glue sets. This info will be helpful when setting the total length later.

With the electronics installed, motor, esc, Rx, and servos ***Do Not Install Prop***, check for proper rotation of servos as well as motor. Check that all servos travel in the correct direction and that the trims are centered. With the servo arms installed, but not screwed on, test fit the control rods. You'll want to make sure that the servos are centered and stay that way for the final control rod build. Install the z-bend wire to the servo arm and heat the shrink tubing. Quickly attach the arm to the servo so as to allow time for any needed adjustments. The glue does allow for a brief moment to slightly move the wire in the tube. You can also heat on the plane, but take care not to heat the foam, it will melt quickly. If needed you can reheat the wrap later to allow adjustments.